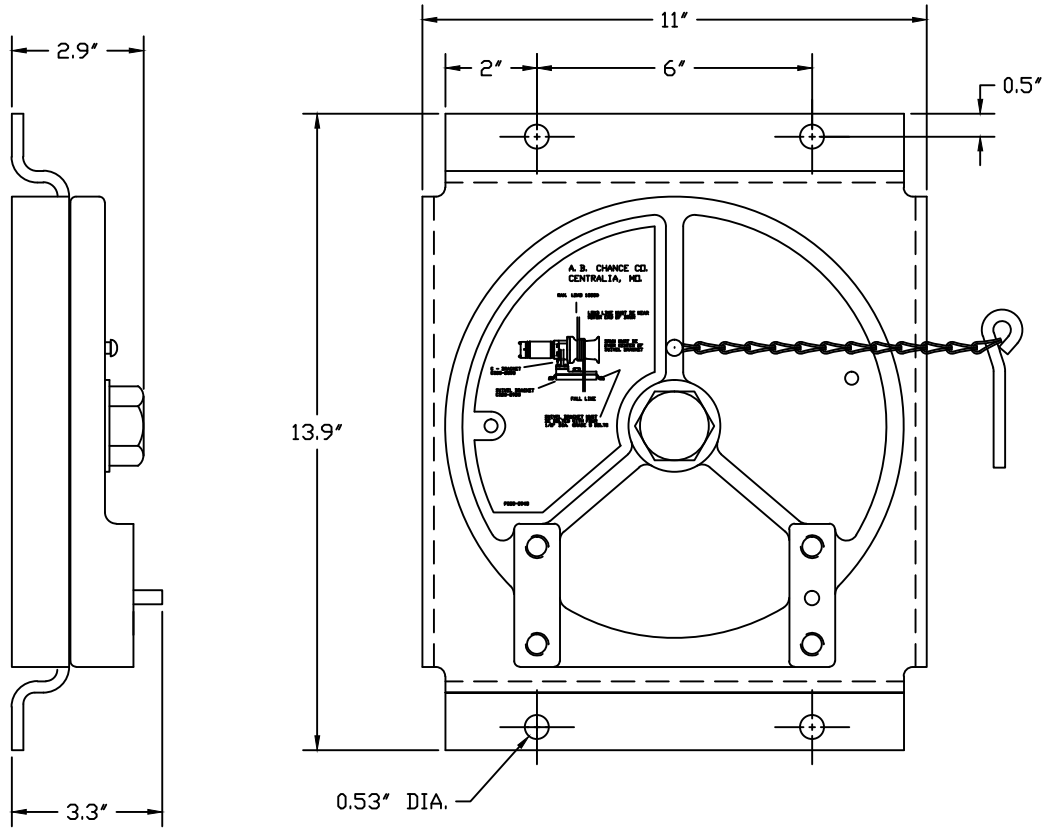

CHANCE®

HUBBELL® POWER SYSTEMS

CONFIDENTIAL: THIS DRAWING AND ITS CONTENTS ARE CONFIDENTIAL AND THE EXCLUSIVE PROPERTY OF HUBBELL POWER SYSTEMS. NO PUBLICATION, DISTRIBUTION OR COPIES MAY BE MADE WITHOUT THE WRITTEN CONSENT OF HUBBELL POWER SYSTEMS. HUBBELL POWER SYSTEMS UNPUBLISHED ALL RIGHTS RESERVED UNDER THE COPYRIGHT LAWS.

TITLE: SWIVEL BRACKET

SIZE	DWG NO.	CAT / PART / ASSY NO.	REV
B	SA308-0903	C308-0903	--

DO NOT SCALE THIS DRAWING	DRN BY TLK	DATE 3/25/14	SHEET 01 OF 01

12.5